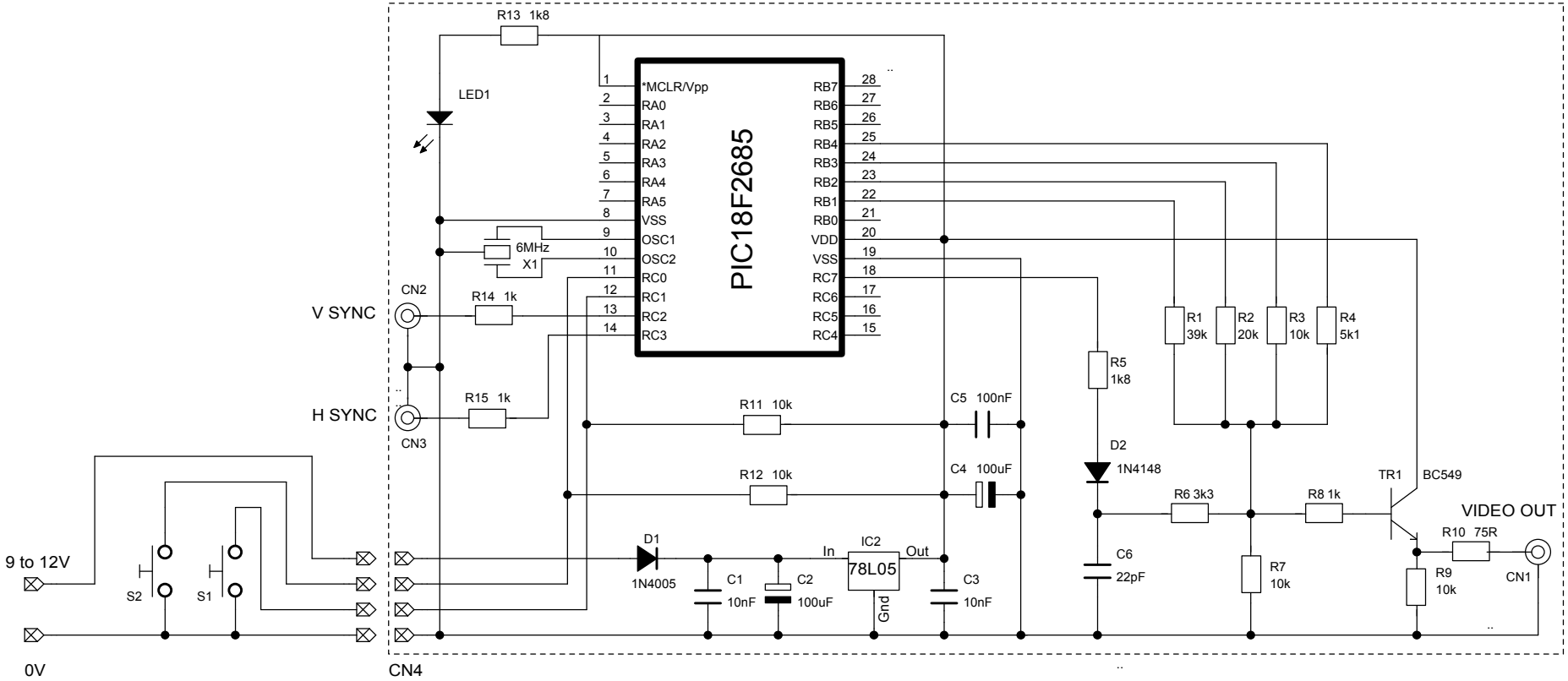
R13 1k8
LED1
PIC18F2685
*MCLR/Vpp
RA0
RA1
RA2
RA3
RA4
RA5
VSS
OSC1
OSC2
RC0
RC1
RC2
RC3
RB7
RB6
RB5
RB4
RB3
RB2
RB1
RB0
VDD
VSS
RC7
RC6
RC5
RC4
6MHz
X1
CN2
V SYNC
R14 1k
CN3
H SYNC
R15 1k
R11 10k
R12 10k
C5 100nF
C4 100uF
R1 39k
R2 20k
R3 10k
R4 5k1
R5 1k8
D2
1N4148
R6 3k3
R8 1k
TR1
BC549
VIDEO OUT
R10 75R
CN1
R9 10k
R7 10k
C6 22pF
C3 10nF
IC2
78L05
In
Out
Gnd
D1
1N4005
C1 10nF
C2 100uF
9 to 12V
S2
S1
0V
CN4